CTTS CONTROLLER

[CTTS-801 & CTTS]

User's manual

O-Sung Electric Machinery CO., LTD.

136, Hantaemal-gil, Wollong-myeon, Paju-si, Gyeonggi-do, 10945, Rep. of KOREA

Tel.: (031) 944-3521 / Fax: (031) 944-3525

Web site: /http://www.osemco.com / E-mail: ousung@chol.com

- Table of Contents -

1. Safety Cautions

1.1 Cautions on transportation

1.2 Installation (mounting, connection) cautions

1.3 Operation cautions

1.4 Cautions on maintenance, inspection, and exchange

2. Product Components

2.1 Specification

2.2 Appearance

2.3 LCD display

2.4 LED display

2.5 Button function

2.6 Rear components

2.7 Terminal features

3. CTTS Control

3.1 LOCAL/REMOTE modes

3.2 Manual operation

3.3 Automatic operation

3.4 Uninterruptible phase-transfer

3.5 Peak shaving

3.6 Interlock control

3.7 Interlock bypass control feature

3.8 Generator test

3.9 Generator start signal output

3.10 Generator speed adjustment

4. Protective Action

5. How to Set Up

5.1 How to enter setup mode

5.2 System setup

5.3 Remote communication setup

5.4 Output (RY) setup

5.5 Input (DI) setup

5.6 A-Power setup

5.7 B-Power setup

5.8 Timer setup

5.9 Synchronous transfer setup

5.10 Alternator test setup

5.11 Equipment usage inspection

5.12 Usage history

6. Communication Protocol

6.1 Communications specifications

6.2 Request (04h)

6.3 Command (05h)

7. Product Appearance

7.1 Product appearance

7.2 Panel cutting schematic

8. How to use the monitoring program

1. Safety Cautions

This caution is important when it comes to user's safety.
Be sure to that you properly handle this equipment after carefully reading this user manual and any other included manuals.
This machine should be used after obtaining knowledge, safety information, and cautions about the device.

This caution note categorizes safety warning levels as [Dangerous] and [Caution]

Danger

Situation wherein improper usage of this equipment may result in death or severe injury

Caution

Potential situation that may cause some injuries with improper use of this equipment

1.1 Cautions on transportation

Caution

- **Do not place or throw objects.**
- **Do not cut the packing box with sharp objects such as a knife.**

1.2 Installation (mounting, connection) cautions

Caution

- **The installation must be conducted by a certified & licensed technician**
- **Prior to equipment installation, make sure to cut off the power of open circuit breakers or similar safety products attached on the front side of the product.**
  Risk of electric shock exists
- **Standard fastening torque should be used to firmly lock the bolt on a terminal.**
  Risk of fire exists
- **This equipment should be mounted on a horizontal and firm surface.**
- **Do not install the equipment in a severe environment including locations with high temperature, high humidity, dust, corrosive gases, vibration, shock, and etc.**
  Fire and malfunction may occur.
- **Ensure that debris such as dust, flour, concrete, iron, and salty water will not enter the equipment.**
  Fire and malfunction may occur.

1.3 Operation cautions

Danger

- Do not contact the main circuit and control devices while the power is supplied.
  Risk of electric shock exists

- Do not expose the equipment in an external environment.
  This equipment may be damaged or cause fire hazard if an electrical short occurs because of water or liquid leakage.

1.4 Cautions on maintenance, inspection, and exchange

Caution

- Maintenance, inspection, or exchange of parts should be conducted by a knowledgeable professional.
- The operation should be conducted after verifying that the circuit breaker is set to OFF. In addition, ensure that the main circuit and the control circuit are not electrically charged.
  Risk of electric shock exists
- Periodically check the connector on the main circuit and terminal.
  Malfunction and fire hazard may occur with improper electrical contact.

2. Product Components

2.1 Specification

1) Power : 24 [VDC] / 7.2[W]

2) Size : (W) 200 mm × (H) 140 mm × (D) 70 mm

3) Product weight : 1.0 kg

4) Operating temperature: -25–70℃

5) LCD display : 192 × 64 graphic LCD

6) LED display : High-brightness LED chops

7) Input voltage : L-N 110 [V] – 300 [V] / 50 [Hz], 60 [Hz]

8) CTTS control relay : 250 [VAC] 16 [A] 4a

9) Auxiliary relay : 250 [VAC] 5 [A] 2 Ea; can be selected from the menu

10) Generator activation relay : 125 [VAC] 1 [A], 30 [VDC] 2 [A] 1c

11) Generator speed adjustment : Variable-resistance output 1a

12) Contact input : CCTS status contact 2a parameter setup; 6a Ea., 24 [VDC]

13) Communication port : RS485

2.2 Appearance

2.3 LCD display

2.3.1 Main screen (Initial display on boot up)

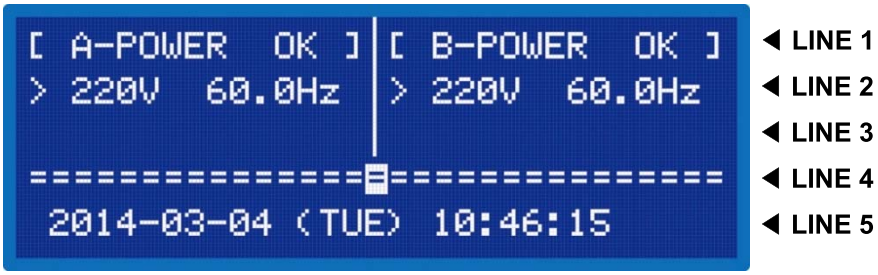

LINE	Contents	Description
1	Power status	Display the status of A-B powers. OK: Normal condition, NG: Abnormal condition, NO: No power
2	Voltage, frequency	Display R phase voltage and frequency on each A-Power and B-power unit.
3	Status display	Input delay duration, OPEN (neutral) delay duration, synchronous transfer delay time, failure stat ue, etc.
4	Synchroscope	Phase angle between A-B power supplies (-180° – 0° – +180°)
5	Current Time	On operation: Display the current time Synchronous transfer: Display detailed synchronous phase (-10° – 0° – +10°) and phase differ ence (-180° – +180°) When operating the generator: Display generator run status When generator is stopped: Display generator cooling time

2.3.2 Detailed voltage information display screen (Use the UP or DOWN button to navigate)

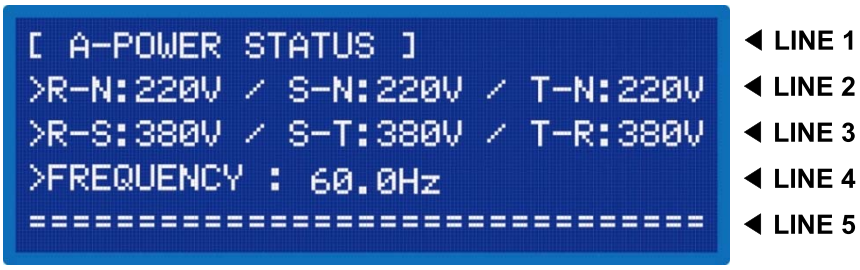

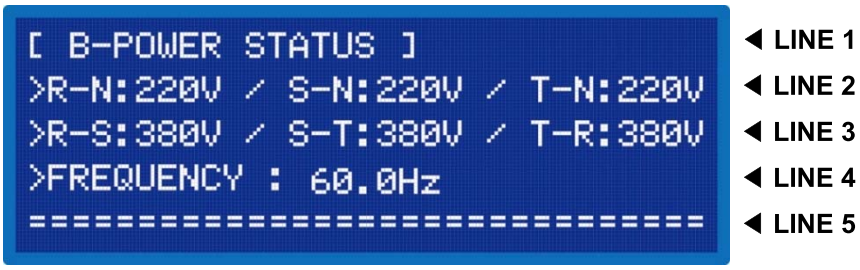

LINE	Contents	Description
1	Display name	The name of a displayed power.
2	L-N-phase voltage display	Display the L-N 3 phase power.
3	Display L-L line voltage	Display 3-phase L-L line voltage of power.
4	Frequency display	Displays the frequency of a power.
5	Line distinction	Display the exit line.

Detailed voltage information screen is only applied on 3P-4W Voltage display screen 3P-4W wiring.

2.3.3 Detailed voltage information display screen (Use the UP or DOWN button to navigate)

LINE	Contents	Description
1	Display name	Fault status display
2	A-power failure display	Display fault content from A-power failure. NO-FAULT indicates no failures. Refer to "Protective action" for more information.
3	B-power failure display	Display fault content from B-power failure. NO-FAULT indicates no failures. Refer to "Protective action" for more information.
4	Other faults display	Fault display other than A-B power failures
5	Line distinction	Display exit line

2.3.4 Contact input, relay output information display screen (Use the UP or DOWN button to navigate.)

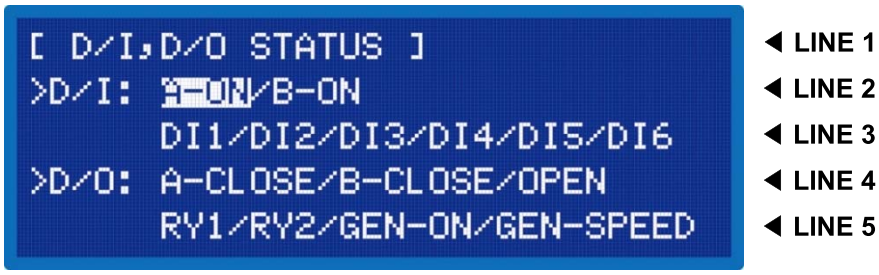

LINE	Contents	Description
1	Display name	Contact input, relay output information display
2, 3	Contact input status display	Contact input status display. Inputted signal is inverted for display. A-ON: A-side contact status, B-ON: B-side contact status DI1–DI6: DI1–DI6 contact
4, 5	Relay output status di splay	Relay output status. The relay output is inverted for display. A-CLOSE: A-side CLOSE signal. B-CLOSE: B-side CLOSE signal. OPEN: OPEN (neutral) signal. RY1 RY2: Auxiliary relay 1 and auxiliary relay 2 signals. GEN-ON: Generator start signal. GEN-SPEED: Generator speed-adjustment signal

2.4 LED display

2.4.1 LED display run status

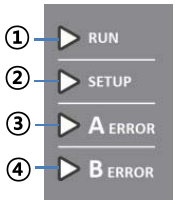

No.	LED	Color	Function
①	RUN	Blue	Lit from a normal mode with enabled CTTS control. Unlit when entered to setup mode.
②	SETUP	Yellow	Lit when entered to setup mode. Unlit from a normal mode that enables CTTS control.
③	A ERROR	Red	Lit on A-Power fault. Unlit when A-Power fault is cleared.
④	B ERROR	Red	Lit on B-Power fault. Unlit when B-Power fault is cleared.

2.4.2 Control status LED display

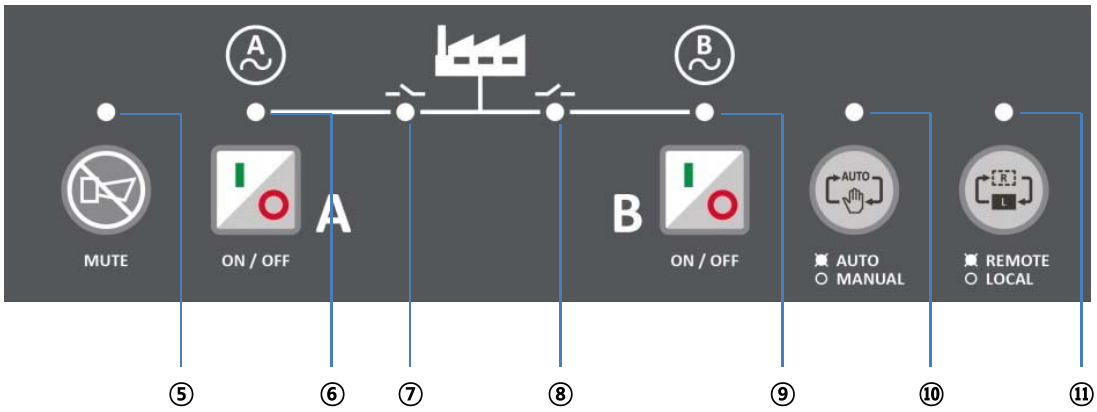

No.	LED	Color	Function
⑤	ERROR	Red	Lit on abnormal behavior, and unlit when fault is cleared. (Lit on DI. Generator alert input)
⑥	A-POWER	Green	Lit on normal A-Power status. Unlit on blacked out A-power. Blink with 0.5 second frequency on abnormal A-power.
⑦	A ON/OFF	Green	Lit when CTTS is closed on the A side. Unlit when CTTS is OPEN (neutral) or CLOSE on the B side. Flash with a 0.1-second interval when external relay contact is inputted on the A side. Flash with a 0.25-second interval when synchronous transfer is on hold on the A side.
⑧	B ON/OFF	Red	Lit when CTTS is CLOSE on the B side. Unlit when CTTS is OPEN (neutral) or CLOSE on the A side. Flash with a 0.1-second interval when external relay contact is inputted on the B side. Flash with a 0.25-second interval when synchronous transfer is on hold on the B side.
⑨	B-POWER	Red	Lit on normal B-Power status. Unlit on blacked out B-power. Blink with a 0.5-second frequency on abnormal B-power.
⑩	AUTO / MANUAL	Green	Lit on Automatic (AUTO) mode. Unlit on MANUAL operation mode. Flash with a 0.5-second interval on DI. BY_PASS input on the A or B side.
⑪	LOCAL / REMOTE	White	Lit on LOCAL control status. Unlit on REMOTE control status.

Underlined section: Refer to 5.4 Setup – Input (DI) section

2.5 Button function

2.5.1 Operation and control buttons

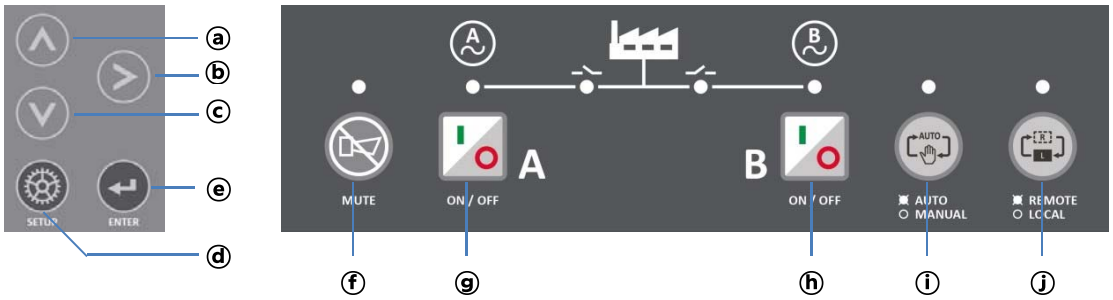

2.5.2 Operation buttons

No.	Button	Name	Button functions on different screen modes			
			Run screen	Setup screen	Detailed menu screen	Detailed menu setup screen
ⓐ		UP	Convert to LCD display screen.	Move parameter.	Move detailed parameter.	Increase set value.
ⓑ		DOWN	Convert to LCD display screen.	Move parameter.	Move detailed parameter.	Decrease set value.
ⓒ		NEXT	X (disabled)	Select parameter.	Select detailed parameter.	Move decimal positions.
ⓓ		SETUP	Press for more than 2 seconds to enter the menu screen.	Switch to Run screen.	Switch to Setup screen.	Clear set value.
ⓔ		ENTER	X (disabled)	X (disabled)	X (disabled)	Save set value

2.5.3 Control button function

No	Button	Name	Button functions on different screen modes			
			Run screen	Setup screen	Detailed menu screen	Detailed menu setup screen
ⓕ		MUTE	Clear alarm buzzer. Press for more than 3 seconds to execute lamp test.	X (disabled)	X (disabled)	Factory default reset
ⓖ		A-POWER ON/OFF	CLOSE/OPEN to A side Synchronous transfer *)	X (disabled)	X (disabled)	X (disabled)
ⓗ		B-POWER ON/OFF	CLOSE/OPEN to B side Synchronous transfer *)	X (disabled)	X (disabled)	X (disabled)
ⓘ		AUTO/ MANUAL	Automatic/Manual Operation mode switch	X (disabled)	X (disabled)	X (disabled)
ⓙ		LOCAL/REMOTE	LOCAL/REMOTE switch	X (disabled)	X (disabled)	X (disabled)

***) CLOSE/OPEN button should be pressed for at least 0.5 seconds.**

2.6 Rear components

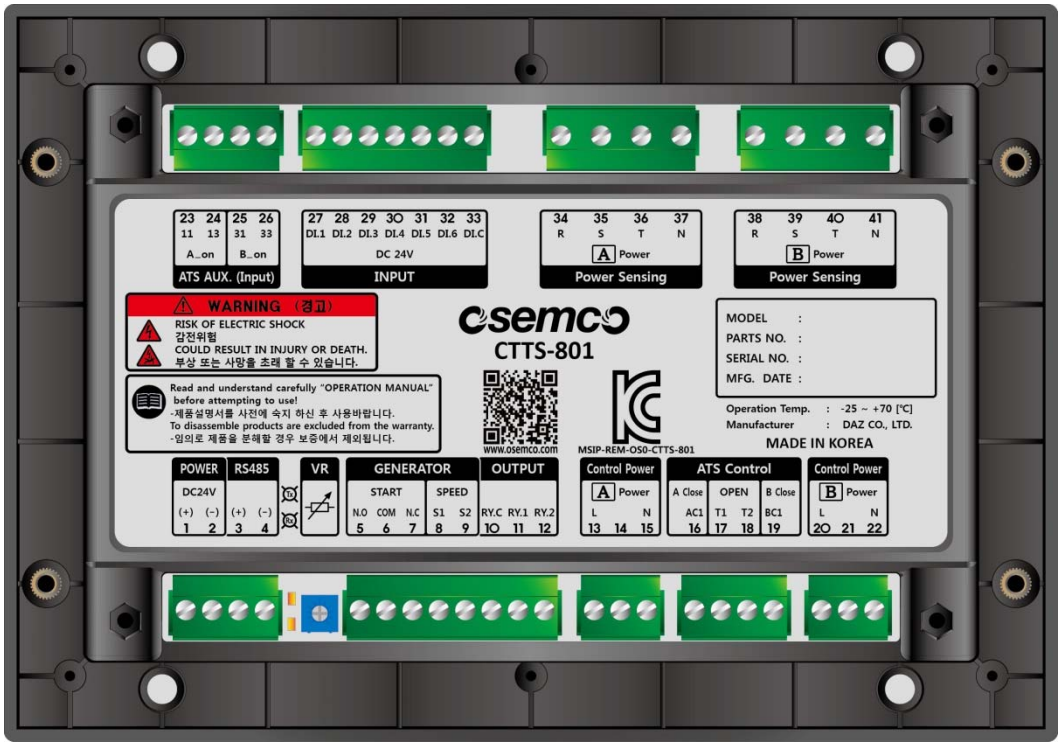

2.7 Terminal features

No.	POWER		
1	DC 24 V (+)	Power input	Controller power DC 24V input (12 V min. – 32 V DC max.)
2	DC 24 V (-)		

No.	RS485		
3	RS485 (+)	Communications	External communication RS485 port
4	RS485 (-)		
-	Tx, Rx	LED	RS485 communication status confirmation LED

No.	GENERATOR		
5	START N.O.	Relay output *	Generator start signal output. (No voltage output, 125 [VAC] / 1 [A], 30 [VDC] / 2 [A]) A contact: N.O - COM, B contact: N,C - COM
6	START COM		
7	START N.C		
8	SPEED S1	Frequency output adjustment	Normal status resistance: VR resistance value Frequency output adjustment resistance: (2 [KΩ] × VR)/(2 [KΩ] + VR) / VR = 0 to 10K
9	SPEED S2		
-	VR	Variable resistor	

* A generator start signal is composed of a **latch** relay and can only be used in automatic run mode.

When initially wiring the equipment, make sure you check the contact status before connecting to a generator start signal.

No.	OUTPUT		
10	RY. C	Relay common in put	Auxiliary relay output. (Non-voltage output, 250 [VAC] / 5 [A]) The definition of the output signal of each item can be individually set.
11	RY.1	Relay output	
12	RY.2		

No.	CONTROL POWER		
13	A POWER L	Control power input	AC adjustment power input for CTTS CLOSE on the A side/OPEN relay outputs signal
14	N.C	Not used	
15	A POWER N	Control power input	

No.	ATS CONTROL		
16	AC1 (A CLOSE)	Control signal output	CTTS CLOSE on A side signal output (AC 277 [V], 16 [A] / DC 110 [V], 3 [A])
17	T1 (OPEN)	Control signal output	CTTS OPEN (neutral) signal output (AC 277 [V], 16 [A] / DC 110 [V], 3 [A])
18	T2 (OPEN)	Control signal output	
19	BC1 (A CLOSE)	Control signal output	CTTS CLOSE on B side signal output (AC 277 [V], 16 [A] / DC 110 [V], 3 [A])

No.	CONTROL POWER		
20	B POWER L	Control power input	AC adjustment power input for CTTS CLOSE on B side/OPEN relay outputs signal
21	N.C	Not used	
22	B POWER N	Control power input	

No.	ATX AUX. (Input)		
23	11 (A_on)	Secondary contact input	A side CTTS CLOSE status AUX secondary contact connection
24	13 (A_on)		
25	31 (B_on)	Secondary contact input	B side CTTS CLOSE status AUX secondary contact connection
26	33 (B_on)		

No.	INPUT (DC24V)		
27	DI.1	External contact input	External contact signal input The definition of the input signal of each item can be individually set.
28	DI.2		
29	DI.3		
30	DI.4		
31	DI.5		
32	DI.6		
33	DI. C (Common)	Common external contacts	Common external contact signals

No.	Power Sensing		
34	A Power R	Sensing voltage input * (PT conversion input)	A-power sensing voltage input (Max. 550 [VAC]) 1P-2W input: R-N 3P-4W input: R-S-T-N
35	A Power S		
36	A Power T		
37	A Power N		

* Do not test the internal voltage as a surge protective varistor is equipped.

No.			
38	B Power R	Sensing voltage input* (PT conversion input)	B-power sensing voltage input (Max. 550 [VAC]) 1P-2W input: R-N 3P-4W input: R-S-T-N
39	B Power S		
40	B Power T		
41	B Power N		

* Do not test the internal voltage as a surge protective varistor is equipped.

3. CTTS Control

3.1 LOCAL/REMOTE modes

1) Modes can be changed by using a **[LOCAL/REMOTE]** button.

The current mode will be saved in the internally equipped memory. As a result, a reboot of the controller shall restore the previously set LOCAL/REMOTE status.

3.1.1 LOCAL mode

1) Unlit white LED on LOCAL/REMOTE mode

2) Can be operated and controlled using the CTTS-801 button

3) **[A-side CLOSE/OPEN]** function on manual run mode from a LOCAL mode

① When the **[A-side CLOSE/OPEN]** button is pressed for more than 0.5 seconds in OPEN (neutral) state and CLOSE to the A side

② When the **[A-side CLOSE/OPEN]** button is pressed for more than 0.5 seconds while closed on the A side, it will become OPEN (neutral) state.

③ When the **[A-side CLOSE/OPEN]** button is pressed for more than 0.5 seconds while closed on the B side, a synchronous transfer will occur on A side.When the RS485 button is pressed during a synchronous transfer operation, a synchronous transfer will be canceled.

3) **[B side CLOSE/OPEN]** function on manual run mode from a LOCAL mode

① When the **[B-side CLOSE/OPEN]** button is pressed for more than 0.5 seconds in OPEN (neutral) state, an object will be closed to the B side.

② When the **[B-side CLOSE/OPEN]** button is pressed for more than 0.5 seconds while closed on B side, it will become OPEN (neutral) state.

③ When the **[B-side CLOSE/OPEN]** button is pressed for more than 0.5 seconds while closed on A side, a synchronous transfer will occur on the B side.

When the [B-side CLOSE/OPEN] button is pressed while a synchronous transfer operation, synchronous transfer will be canceled.

3.1.2 REMOTE mode

1) Lit white LED on LOCAL/REMOTE mode

2) Cannot be operated/ controlled using the CTTS-801 button (Can be controlled with a remote 485 communication or contact input)

3) **DI. A-side CLOSE input** contact on REMOTE mode

① Will be closed on the A side with a **DI. A-side CLOSE input** in OPEN (neutral) state

① Will synchronously transfer to the A side with a **DI. A-side CLOSE input** while it is closed on the B side

A DI. A-side CLOSE input during synchronous transfer will cancel the synchronous transfer.

3) **DI. B-side CLOSE input** on REMOTE mode

① Will be closed on the B side with a **DI. B-side CLOSE input** in OPEN (neutral) state

① Will synchronously transfer to the B side with a **DI. B-side CLOSE input** while it is closed on the A side

A DI. B-side CLOSE input during synchronous transfer will cancel the synchronous transfer.

5) On **DI. OPEN input** on a REMOTE mode

① Will become OPEN (neutral) with a **DI. OPEN input** while it is closed on the A side

① Will become OPEN (neutral) with a **DI. OPEN input** while it is closed on the B side

3.2 Manual operation

3.2.1 Characteristics of the manual mode

1) Button adjustment or contact input can control the A-B Power CLOSE and OPEN (neutral) state.

2) Synchronous transfer: Synchronous transfer will occur after a delayed uninterruptible phase in manual mode, if both powers are normal.

3) Generator control: Generator start signal is not outputted on manual mode.

4) Generator test: A periodic generator test feature is not applicable on manual mode.

3.2.2 Manual control

1) CLOSE CTTS to A-side

① Can only be closed on normal A-Power status
② CTTS will be closed to the A side when pressing the **[A-side CLOSE/OPEN]** button in OPEN (neutral) state for more than 0.5 seconds.
③ Can CLOSE to the A side in REMOTE manual control mode by using the **DI.A-side input** contact
A-side output time will be maintained while pressing the CLOSE button.

2) CLOSE CTTS to B-side

① Can only be closed on normal B-Power status
② CTTS will be closed to the B side when pressing **[B-side CLOSE/OPEN]** button on OPEN (neutral) state for more than 0.5 seconds.
③ Can CLOSE to the B side in remote manual control mode by using the **DI.B-side input** contact
B-side output time will be maintained while pressing the CLOSE button.

3) CTTS OPEN (neutral)

① Can only become OPEN (neutral) when at least the power is switched on from the A-B-power.
② Can be opened (neutral) when the **[A-side CLOSE/OPEN]** button is pressed for more than 0.5 seconds when the CTTS is closed to the A side.
② Can be opened (neutral) when the **[B-side CLOSE/OPEN]** button is pressed for more than 0.5 seconds when the CTTS is closed to the B side.
Make OPEN (neutral) by contacting the **DI. OPEN input**.
OPEN (neutral) time will be maintained while pressing the OPEN button.

4) CTTS uninterruptible-phase transfer

① Synchronous transfer can be conducted when both powers are normal.
② Synchronous transfer will be conducted from A-Power to B-Power when the **[B-side CLOSE/OPEN]** button is pressed for more than 0.5 seconds when the CTTS is closed to the A side.
② Synchronous transfer will be conducted from B-Power to A-Power when the **[A-side CLOSE/OPEN]** button is pressed for more than 0.5 seconds when the CTTS is closed to the B side.
④ In remote manual mode, a synchronous transfer will be conducted from the A-Power to B-Power when contacting the **DI. B-side CLOSE input** when the CTTS is closed to the A side.
⑤ In remote manual mode, synchronous transfer will be conducted from A-Power to B-Power when contacting **DI. A-side CLOSE input** when the CTTS is closed to the B side.
⑤ Uninterruptible synchronous transfer will be put on hold in accordance with the **[Synchronous transfer expiration time]** until the phase-locked condition is matched on both sides. If the phase-lock fails prior to the **[Synchronous transfer expiration time]**, the manual synchronous switch will then be canceled.
⑥ If the frequency difference on both powers are identical, the **[Generator speed adjustment]** signal will be generated while waiting for uninterruptible power synchronous transfer. (See section 3.12.)

3.3 Automatic operation

3.3.1 Characteristics of automatic mode

1) CTTS CLOSE will be delayed based on A-B power status, and it will be opened (neutral) and synchronously transferred.

2) Automatic operation:

① If both powers are good, it will be transferred by **[Power priority].**

② Once abnormal status r is detected in the power and the nonused power status is normal, it will OPEN (neutral) first after a delay time.

CTTS will then be closed to the A side with a normal power status.

③ When a CTTS secondary contact input is detected, repeat the output signal three times with a 3-second interval. If CLOSE still fails after three attempts, the CTTS fault will be raised. CLOSE and OPEN (neutral) output will be maintained for 0.5 seconds.

3) Operation based on power priority list

Based on **[Power priority] setup**, a hold will be placed by **[Synchronous transfer expiration time]** until the phase-locked condition become matched on uninterruptible synchronous.

If the synchronous switch fails during **[Synchronous transfer expiration time]**, then **[Alert standby]** or **[Forced OPEN and transfer]** will be executed based on the **[Synchronous transfer failure condition] setup.**

① If the A-Power has higher priority on the **[Power priority]** and if the current B-Power is used, it will then be transferred to the A-power once the power becomes normal and the phase is locked.

② If the B-Power has higher priority on the **[Power priority]** and if the current A-Power is used, it will then be transferred to the B-power once the power becomes normal and the phase is locked.

4) Generator control:

Depending on the settings in the **[Power priority]**, abnormal power, peak-shaving contact input, and generator start relay signal output will be maintained.

5) Generator test: Based on eight **[Generator test setup screen]** schedules, a generator test will be automatically executed.

① **[Unused]**: Do not execute generator tests.

② **[Used]**: Generator tests will be executed based on the reserved schedule.

③ **[Use + transfer]**: Generator test will be executed as reserved, and the synchronous transfer will be used if both powers are found normal. When the scheduled test is completed, it will return to the uninterruptible phase synchronous transfer, and the generator will additionally be operated based on **[Generator cooling time]**.

6) **[Synchronous transfer]** setup

① If **[Synchronous transfer]** setup is “enabled” and both power statuses are normal, it will be synchronously transferred after the **[Switch delay time]** + **[Sync delay]** elapses.

② If **[Synchronous transfer]** setup is “Disabled,” the CTTS will be opened (neutral) and transferred based on the OPEN and CLOSE delay times.

3.4 Uninterruptible phase transfer

This is a phase-locked overlapping switch function to transfer a load without an instantaneous power drop when both powers are normal.

1) Condition

① It will be synchronously transferred when voltage, frequency, and phase angle conditions are satisfied based on the setup standard.

② Based on the **[Power priority]** setup, the power will be transferred to a higher priority power, if both powers are normal.

2) Uninterruptible phase transfer setup

① **[Synchronous transfer]** can be setup <Used/unused>

② **[Synchronous transfer phase angle]** can be setup <Fix to less than 5 when a CTTS synchronous transfer is used.>

③ **[Synchronous transfer voltage]** can be setup <2 V – 10 V>

④ **[Synchronous transfer frequency]** can be setup <0.5 Hz – 1.0 Hz>

⑤ **[Synchronous transfer delay time]** can be setup <0 seconds to 20 minutes>

⑥ **[Synchronous transfer expiration time]** can be setup <0 seconds to 20 minutes>

⑦ **[Synchronous failure conditions]** can be setup <Force OPEN and switch/alarm.>

`

3.5 Peak shaving (peak control)

This function is primarily used to reduce the power load by using uninterruptible synchronous transfer after the generator is started. (When peak shaving is necessary, when remotely controlling peak shaving)

1) On **DI. Peak shaving** contact input, a generator's contact will be outputted and an uninterruptible synchronous transfer will be conducted to a secondary power source.

2) On **DI. Peak shaving** contact input release, a load will be synchronously transferred to a primary power and stop the operation after the **[Generator cooling time]** that was previously set.

3) As a peak shaving feature will disable peak shaving when **DI. Generator fault** contact is inputted.

If a secondary power is normal, the power will be synchronously transferred to a primary power. If a secondary power is abnormal, the secondary power will be opened (neutral) and transferred to a primary power.

[Example] Peak shaving **(A power set as primary on [Power priority], currently on the B-Power generation.)**

① **[Generator start signal]** will be outputted on the **DI. Peak shaving** input on Automatic run mode. When the generator power is confirmed, the power will be uninterruptible and synchronously transferred with a locked phase, and the CTTS will use the generator as a load.

② On **DI. Peak shaving input** release during automatic run mode, the power will be uninterruptedly and synchronously transferred with a locked phase, and the CTTS will use the primary power.

Once the primary power usage is confirmed, the **[Generator start signal]** will run based on the **[Generator cooling time]**.

③ During a normal generator operation with the enabled peak-shaving function, the power will be automatically and synchronously transferred to a primary power with a locked phase, if the **DI. Generator fault** is inputted because of insufficient fuel, overheating, etc.

④ If any fault occurs on the currently used power source with the enabled peak-shaving feature, it will automatically be opened (neutral) and synchronously transferred to allow the use of the primary source.

3.6 Interlock control

This feature is used to prevent the synchronous transfer all CTTS at the same time when multiple CTTS are used in automatic run mode. If a synchronous transfer of CTTS with a quick waiting time is completed, the next CTTS will be synchronously transferred.

1) Set up a secondary relay of a CTTS-801 with quicker turn from the **[Interlock control output]**. Then, contact the next CTTS-8801 in turn to **DI. Interlock control input.** (Faster CTTS will be synchronously transferred. However, if a failure occurs, the **[Interlock control output]** will be released so the next CTTS can be operated.)

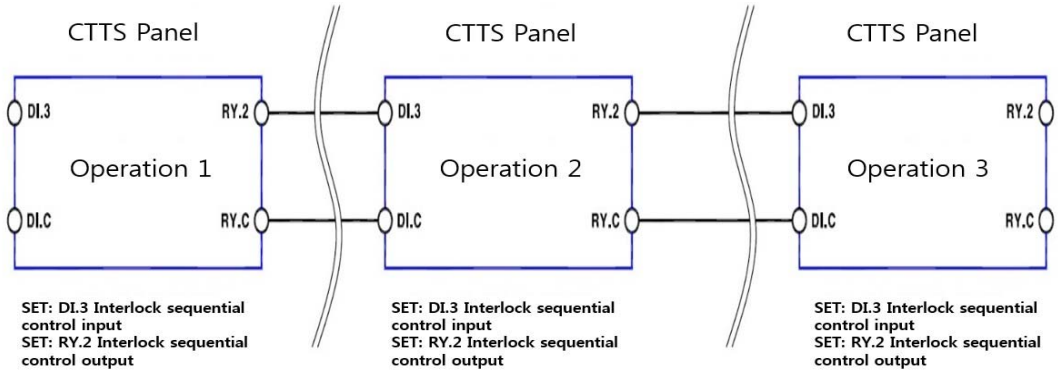

3.7 Interlock bypass control feature

When manually controlling bypass type CTTS CLOSE, CTTS-801 will be converted to a forced manual run mode. The CTTS CLOSE/OPEN process will be manually controlled to a side with closed bypass CTTS.

1) On **DI. A-side BYPASS input** contact, AUTO, MANUAL lamps will be flashed and manual CLOSE/OPEN of A side will be enabled.

2) On **DI. B-side BYPASS input** contact, AUTO, MANUAL lamps will be flashed and manual CLOSE/OPEN of B side will be enabled.

3.8 Generator test

A periodic generator start test will be conducted based on a schedule set on the **[Generator test setup]** from an automatic run mode.
In case of an emergency generator usage situation, this feature enables the maintenance of the best generator condition.

1) The test schedule can be set by week, day of the week, start time, and end time.

2) When testing a generator, the user can select which power source to use by CTTS.

3.9 Generator start signal output

1) On the **DI. Generator manual activation** input, the **[Generator start signal output]** will be **outputted.**

2) **[Generator starting signal output]** will be **outputted** when running a test based on the **[Generator test setup]**.

3) **Upon the release of the generator start condition from a secondary power based on [Generator start signal output]**, the operation will be stopped after **[Generator cooling time]**

4) **Upon the release of a no-load generator operation after [Generator start signal output]**, the generator will be operated for an additional minute before it is stopped.

3.10 Generator speed adjustment

When the phase angle change is slow because of a matched frequency difference on synchronous transfer, this feature automatically adjusts a generator's speed.

1) This feature can be applied to a generator with electrical burner, and the resistance of SPEED TRIM terminal is adjusted.

2) The 5 KΩ VR resistor is populated on the SPEED TRIM of a burner, and the generator frequency is set to be 60, 1Hz as an operation condition.

3) The resistance value during the speed adjustment will be VR 10 K Ω + 10 K Ω. This value will be displayed on the synchronous switch control if the frequency difference of commercial power source is 0.1Hz less.

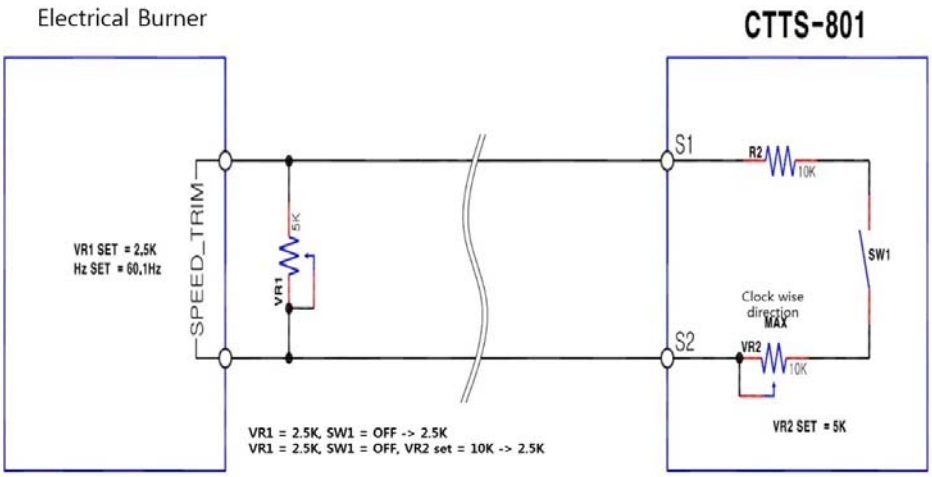

4. Protective action

Protective action
REVERSE PHASE - Only works on a 3P-4W input - If the phase rotation directions of the A-B Powers are opposite of the setup direction.
OPEN PHASE - Only works on a 3P-4W input
UNDERVOLTAGE - The low voltage protection will not work on an OPEN phase condition.
OVERVOLTAGE
UNDER FREQUENCY - The under frequency protection will not work on an OPEN phase condition.
OVER FREQUENCY

5. How to set up

5.1 How to enter the setup mode

1) The setup mode can only be entered on a manual run mode.

2) Press the **[SETUP]** button for more than two seconds to enter the mode.

3) If you have not set a password, it will automatically enter the setup parameters. Search and modification are enabled.

4) If a password has been previously set, select either **[Parameter search]** or **[Settings]** button.
If you press **the [Parameter search]**, you can view the setup parameter without entering a password.
However, a modification will not be allowed in this case.
If you press **the [Settings]**, you must enter password to go to the parameter.

5) When no key is pressed for 20 seconds during the setup mode, it will result in the automatic completion of the mode.

6) The factory default password is 0001. Please change it to 0000 if you do not wish to use a password.

5.2 System settings

> Voltage input	Factory default value: 3P-4W
- Set up usage voltage detection method. - 1P-2W (Single phase): Only input the R-N phase. - 3P-4W (three-phase): Input all R-S-T-N phases	

> Voltage phase display	Factory default value: R, S, T
- Not displayed on 1P-2W (single phase). - Use a phase display method that is used in the field. - Settings: [R, S, T] [U, V, W] [V1, V2, V3] [1, 2, 3] [A, B, C]	

> Voltage phase rotation direction	Factory default value: normal
- Set up the phase direction of the A and B powers. - [REVERSE PHASE] fault will occur if the phase direction is not matched. - Settings: Normal, reverse	

> Voltage setting	Factory default value: 220 [V]
- Set up a voltage of the used cables. - Setting range: 110 [V] – 277 [V]	

> Voltage PT ratio	Factory default values: 1:1
Set up the 1st, 2nd voltage ratio when using PT. - Set up the 1st and 2nd voltage ratio to 1:1 when not using PT. -Setting range: (1–10):(1–10)	

> Frequency settings	Factory default value: 60 [Hz]
- Set up the frequency value. - Settings: 50 [Hz], 60 [Hz]	

> **Power priority**	Factory default values: A-power
- Set up the priority of powers on the A and B sides. If both powers can be used, set up a primary power source. - [No priority]: Use when priority is not necessary. - Setting: A-power, B-power, no priority.	

> **ATS connection status**	Factory default value: A side for commercial, B side for emergency
- Select power types for CTTS's A- and B-side powers. - - Settings: A side for commercial and emergency, B side for commercial and emergency	

> **Alarm settings**	Factory default value: buzzer + alarm relay
- Set up an alarm method on failures. - Settings: [Buzzer], [Alarm relay], [Buzzer + Alarm relay]	

> **Date setting**
- Set the current year, month, day, and day of the week.

> **Time setting**
- Set the current time.

> **LANGUAGE**	Factory default value: Korean
- Set the language of the controller. - Settings: Korean, English	

> **Display OFF (1 hour)**	Factory default value: Unused
- This feature turns off the LCD if no control is detected for an hour (to prevent LCD artifact). - Pressing the button during the controller's automatic operation will enable the display for an additional one hour. - Settings: Use, unused	

> **Password change**	Factory default value: 0001
- Set the user password. - If a password is set, the user must enter the password to change a menu. - Setting range: 0001–9999 - On release: Enter 3525 and MUTE + ENTER.	

5.3 Remote communication setup

> MODBUS communications prefix	Factory default value: 01
-Set MODBUS communication prefix. -Setting range: 01–32	

> MODBUS Communication BAUDRATE	Factory default values: 9600 [BPS]
-Set the baud rate of MODBUS communication -Settings: 9600, 19200 , 38400 [BPS]	

5.4 RY Output setup

>RY. 1 output setup	Factory default value: Alarm output
>RY. 2 output setup	Factory default value: Interlock control output

- Set output signal for auxiliary relay RY1–RY2,

Alarm output: A or B side failure or CTTS failure status

Interlock control output: An output that delays a synchronous switch with lower order CTTS when using multiple CTTS

Not used: Relay output is not used.

Reset output: Outputs a signal to the external instrument while pressing the [MUTE] button.

LOCAL status: Outputted when in LOCAL mode

REMOTE status: Outputted when in REMOTE mode

Automatic mode: Outputted when in Auto mode

Manual mode: Outputted when in Manual mode

5.5 DI input setup

> DI. 1 input setup	Factory default value: Peak shaving
> DI. 2 input setup	Factory default value: Generation alarm input
> DI. 3 input setup	Factory default value: Interlocking control input
> DI. 4 input setup	Factory default value: Disabled
> DI. 5 input setup	Factory default value: A-side BYPASS input
> DI. 6 input setup	Factory default value: B-side BYPASS

- Setup contact input DI1–DI6 input signals.

Peak shaving: When contact is inputted, synchronous switch to a secondary power after starting a generator will occur. (See section 3.5.)

Peak shaving while driving the contacts entered, peak shaving, and alarm output function

Interlock control input: Synchronous transfer is delayed to prevent duplicated CLOSE when multiple CTTS are used.

(See section 3.6.)

Not used: Contact input is not used.

A-side BYPASS input: A-side BYPASS signal input (See section 3.9.)

B-side BYPASS input: B-side BYPASS signal input (See section 3.9.)

A-side CLOSE input: CLOSE CTTS to A side when contact is inputted on REMOTE mode.

B-side CLOSE input: CLOSE CTTS to B side when contact is inputted on REMOTE mode.

OPEN input: OPEN (neutral) CTTS when contact is inputted in REMOTE mode.

Remote manual setup: Fixed to a manual mode while contact is inputted on a REMOTE mode

(will be fixed to Auto mode with no input)

A-side protective relay input: ATO output interlock signal input when using ATCB (not used in CTTS product)

B-side protective relay input: ATO output interlock signal input when using ATCB (not used in CTTS product)

5.6 A-Power setup

> **Overvoltage operation set**	Factory default value: 110 [%]
- Setup over-voltage operation range - Setup range: 105 [%] – 130 [%]	

> **Overvoltage operation off**	Factory default value: Overvoltage trigger value -3 [%]
- Set the overvoltage operation off value. - Setup range: Overvoltage operation set value -5 – -1 [%]	

> **Low-voltage operation set**	Factory default value: 85 [%]
- Set the low-voltage operation value - Setup range: 85 [%] – 95 [%]	

> **Low-voltage operation off**	Factory default value: Low-voltage operation set value of +3 [%]
- Set the low-voltage operation off value. - Setup range: Low-voltage operation set value +1 – + 5 [%]	

> **Over-frequency operation set**	Factory default value: Frequency operation set point +1.0 [Hz]
- Set up the over frequency operation range. - Setup range: Over-frequency operation set value +1.0 to – 5.0 [Hz]	

> **Over-frequency operation off**	Factory default value: Over-frequency operation range -0.5 [Hz]
- Set the over-frequency operation off range. - Setup range: Over-frequency operation range -1.0 – -0.2 [Hz]	

> **Low-frequency operation set**	Factory default value: Low-frequency operation set value -1.0 [Hz]
- Set up the low-frequency operation range. - Setup range: Low-frequency operation range -5.0 – -1.0[Hz]	

>**Low-frequency operation off**	Factory default value: Low-frequency operation value + 0.5 [Hz]
- Set up the low-frequency operation range. - Setup range: Low-frequency operation value +0.2 – +0.1[Hz]	

> **Phase-loss protection behavior**	Factory default value: Enabled
- Set up the phase-loss protection option within the 3P-4W input condition. - This menu is not displayed when using the 1P-2W input. - Setup items: Enabled, Disabled	

5.7 B-Power setup

> **Overvoltage operation set**	Factory default value: 110 [%]
- Set up the overvoltage operation range. - Setup range: 105 [%] – 130 [%]	

> **Overvoltage operation off**	Factory default value: Overvoltage trigger value -3 [%]
- Set over-voltage operation off value. - Setup range: Overvoltage operation set value -5 – -1 [%]	

> **Low-voltage operation set**	Factory default value: 85 [%]
- Set the low-voltage operation value. - Setup range: 85 [%] – 95 [%]	

> **Low-voltage operation off**	Factory default value: Low-voltage operation value of +3 [%]
- Set the low-voltage operation off value. - Setup range: Low-voltage operation set value +1 – + 5 [%]	

> **Over-frequency operation set**	Factory default value: Frequency operation set point +1.0 [Hz]
- Set up the over-frequency operation range. - Setup range: Over-frequency operation set value +1.0 to – 5.0 [Hz]	

> **Over-frequency operation off**	Factory default value: Over-frequency operation range -0.5[Hz]
- Set the over-frequency operation off range. - Setup range: Over-frequency operation range -1.0 – -0.2 [Hz]	

> **Low-frequency operation set**	Factory default value: Low-frequency operation set value -1.0 [Hz]
- Set up the low-frequency operation range. - Setup range: Low-frequency operation range -5.0 – -1.0 [Hz]	

>**Low-frequency operation off**	Factory default value: Low-frequency operation value +0.5 [Hz]
- Set up the low-frequency operation range. - Setup range: Low-frequency operation value +0.2 – +0.1 [Hz]	

> **Phase-loss protection behavior**	Factory default value: Enabled
- Set up the phase-loss protection option within the 3P-4W input condition. - This menu is not displayed when using the 1P-2W input. - Setup items: Enabled, Disabled	

5.8 Timer setup

> A-Power CLOSE delay time	Factory default value: 00 min 05 sec
- Set up the CLOSE delay time on A-Power in OPEN (neutral) status with the Automatic run mode. - Setup range: 00 min 00 sec – 90 min 00 sec	

> A-Power OPEN (neutral) delay time	Factory default value: 00 min 05 sec
- Set up the OPEN delay time on A-Power in OPEN (neutral) status with the Automatic run mode. - Setup range: 00 min 00 sec – 90 min 00 sec	

> B-Power CLOSE delay time	Factory default value: 00 min 05 sec
- Set up the CLOSE delay time on B-Power in OPEN (neutral) status with the Automatic run mode. - Setup range: 00 min 00 sec – 90 min 00 sec	

> B-Power OPEN (neutral) delay time	Factory default value: 00 min 05 sec
- Set up the OPEN delay time on B-Power in OPEN (neutral) status with the Automatic run mode. - Setup range: 00 min 00 sec – 90 min 00 sec	

Generator usage cooling time	Factory default value: 1 min 00 sec
- When the CTTS is stopped in Automatic mode with a load, the generator will continue to run based on the previously set cooling time. - Setup range: 00 min 00 sec – 90 min 00 sec - If the operation mode is transferred to Manual mode during the cooling time, the generator will continue to be powered for the remaining cooling time. - Even during the cooling time, pressing the MUTE button for two seconds will release the cooling operation.	

No-load generator cooling time	Factory default value: 1 min 00 sec
- When the CTTS is stopped in Automatic mode with no-load, the generator will continue to run based on the cooling time setup. - Setup range: 00 min 00 sec – 90 min 00 sec - If the operation mode is transferred to Manual mode during the cooling time, the generator will continue to be powered for the remaining cooling time. - Even during the cooling time, pressing the MUTE button for two seconds will release the cooling operation.	

3.7 Synchronous transfer setup

> Use synchronous transfer	Factory default value: Enabled
- Set up to use synchronous transfer. If [Unused] is selected, the synchronous transfer will not be enabled. As such, use designated power. - Setup items: Enabled, Disabled	

> Synchronous phase angle range	Factory default value: 05˚
- Phase-angle setup range: 05˚ – 03˚	

> Synchronous voltage difference range	Factory default value: Less than 10 [V]
- Synchronous transfer condition: Set up the phase voltage difference value. - Setup range: 02 [V] – 10 [V]	

> Synchronous frequency range	Factory default value: Less than 1.0 [Hz]
- Synchronous transfer condition: Set up the frequency difference condition on both powers. - Setup range: 0.1 [Hz] – 1.0 [Hz]	

> Synchronous transfer delay time	Factory default value: 00 min 05 sec
- Synchronous transfer will be conducted after the previously set delay time. - Setup range: 00 min 00 sec – 90 min 00 sec	

> Synchronous transfer expiration time	Factory default value: 05 min 00 sec
- Set up the synchronous transfer expiration time. - Setup range: 00 min 00 sec – 90 min 00 sec	

> Synchronous failure conditions	Factory default value: Alarm standby
- (Auto mode) Set up a handling method in case it fails to conduct a synchronous switch within the expiration time. - [Alarm standby]: Maintain the current state and output buzzer (alarm). - [Forced OPEN and transfer]: Trip the CTTS and CLOSE with current power. - Setup items: [Alarm standby], [forced OPEN after transfer]	

5.10 Generator test setup

> Generator test n (n:1-8)	Factory default value: Unused
- Set up the generator test usage. - [Unused]: A generator test will not be used - [Used]: Use a generator test. The CTTS will not be synchronously transferred - [Use + transfer]: Use a generator test. After the generator is started, the power CTTS will be synchronously transferred to a primary power. - Setup: Use, unused, used + transfer	

> Generator test n cycles (n: 1–8)	Factory default values: 1 [week] (days)
- Set the generator's monthly test cycle with the day of the week and the week. - Setup range: 1 [week] to 5 [weeks] (Sunday) – (SAT)	

>Generator test n operation (n: 1–8)	Factory default value: 00:00 – 00:00
- Set up the generator test and end time. - Setup range: 00:00–23:59	

5.11 Equipment inspection

> Number of transfer on A-Power
- Display the number of times that CTTS is closed to A-Power.

> Number of transfer on B-Power
- Display the number of times that CTTS is closed to B-Power.

> A-side power usage time
- Display the accumulated usage time of the A side with CTTS.

> B side power usage time
- Display the accumulated usage time of the B side with CTTS.

> OPEN (neutral) state time
- Display the accumulated OPEN (neutral) time with CTTS.

5.12 Use history (up to 1024 items)

> Times	Displays the time of the event.
> Save contents.	- No usage history - CTTS-801 power ON: Controller power is ON. - Manual mode conversion: Controller is transferred to Manual mode. - Automatic mode conversion: Controller is transferred to Auto mode. - LOCAL mode conversion: Controller is transferred to LOCAL mode. - REMOTE mode conversion: Controller is transferred to REMOTE mode. - Generator start: Controller starts a generator. - Generator stop: Controller stops a generator. - Generator speed adjustment: Controller outputs the generator speed adjustment signal, while the generator is running. - Peak shaving start: Controller starts the peak shaving control. - Peak shaving end: Controller stops the peak shaving control. - Interlocking control inputs: External interlock signal is inputted on a controller. - Interlocking control inputs OFF: External input releases the interlock control signal - Interlock control output: Controller outputs the interlock control signal - Interlock control output OFF: Release an interlock signal from a controller. - Generator fault: Generator's fault causes a fault signal input to a controller. - A-side manual CLOSE: CTTS is manually closed to A side. - A-side manual OPEN: CTTS is manually opened to neutral on A side. - B -> A manual transfer: CTTS is manually and synchronously transferred from B to A side. - A-side auto-CLOSE: CTTS is automatically closed to A side. - Automatic A side OPEN: CTTS is automatically opened (neutral). - B- > A manual transfer: CTTS is automatically and synchronously transferred from B to A side. - B-side manual CLOSE: CTTS is manually closed to B side. - B side manual OPEN: CTTS is manually opened to neutral on B side. - A -> B manual transfer: CTTS is manually and synchronously transferred from A to B side. - B-side auto-CLOSE: CTTS is automatically closed to B side. - Automatic B-side OPEN: CTTS is automatically opened (neutral). - A -> B manual transfer: CTTS is automatically and synchronously transferred from A to B side. - A-side power OFF: The power on the A side is set to OFF - A-side power ON: The power on the A side is set to ON - A-side reverse phase: Reverse phase on A-Power - A-side phase sequence: Phase sequence on A-Power - A-side over-voltage: Overvoltage on A-Power - A-side low-power: Low-voltage on A-Power - A-side over-frequency: Over-frequency on A-power - A-side low-frequency: Low-frequency on A-Power - A-side protective relay: Active protective relay on A-Power - A-side CLOSE failure: Fails to CLOSE on Auto mode on the A side - A-side OPEN failure: Fails to OPEN on Auto mode on the A side - A -> B Synchronous switch failure: Synchronous transfer failure from A to B side in Auto mode - B-side power OFF: The power on the B side is set to OFF. - B-side power ON: The power on the B side is set to ON. - B-side reverse phase: Reverse phase on B-Power - B-side phase sequence: Phase sequence on B-Power - B-side overvoltage: Overvoltage on B-Power - B-side low-power: Low-voltage on B-Power - B-side over-frequency: Over-frequency on B-power - B-side low-frequency: Low-frequency on B-Power - B-side protective relay: Active protective relay on B-Power - B-side CLOSE failure: Fails to CLOSE on Auto mode on B side - B-side OPEN failure: Fails to OPEN on Auto mode on B side - B -> A Synchronous switch failure: Synchronous transfer failure from B to A side in Auto mode

6. Communication protocol

6.1 Communications specifications

1) Communication method : 2-WIRE RS485 Port
2) Communication protocol : MODBUS / RTU
3) Support function : REQUEST (04h), COMMAND (05h)
4) Communication code : 1–32
5) Communication BAUDRATE : 9,600 [bps], 19,200 [bps], 38,400 [bps]
6) Communications parity : No parity (NONE)
7) Data bit : 8 [bit]
8) Stop bit : 1 [bit]
9) Minimum communication interval : 250 [ms]
10) Packet end-time : 5 [ms]

6.2 REQUEST (04h)

TX EXAMPLE: 01 04 00 00 00 14 CRC16 → Request 20 sets of data starting from address 30001

Address	Contents		Data display	Data type
30001	Serial number		XXXXX	16 bit UNSIGNED INT
30002	Controller firmware version		X.XXX	16 bit UNSIGNED INT
30003	A-power R-N-phase voltage		XXX [V]	16 bit UNSIGNED INT
30004	A-power S-N-phase voltage		XXX [V]	16 bit UNSIGNED INT
30005	A-power T-N-phase voltage		XXX [V]	16 bit UNSIGNED INT
30006	A-power R-S-phase voltage		XXX [V]	16 bit UNSIGNED INT
30007	A-power S-T-phase voltage		XXX [V]	16 bit UNSIGNED INT
30008	A-power T-R-phase voltage		XXX [V]	16 bit UNSIGNED INT
30009	A-power frequency		XX. X [Hz]	16 bit UNSIGNED INT
30010	B-power R-N-phase voltage		XXX [V]	16 bit UNSIGNED INT
30011	B-power S-N-phase voltage		XXX [V]	16 bit UNSIGNED INT
30012	B-power T-N-phase voltage		XXX [V]	16 bit UNSIGNED INT
30013	B-power R-S-phase voltage		XXX [V]	16 bit UNSIGNED INT
30014	B-power S-T-phase voltage		XXX [V]	16 bit UNSIGNED INT
30015	B-power T-R-phase voltage		XXX [V]	16 bit UNSIGNED INT
30016	B-power frequency		XX. X [Hz]	16 bit UNSIGNED INT
30017	Phase angle difference from both powers.		XXX [?]	16 bit SIGNED INT
30018 30019	A-power usage time		XXXXXXXX. XX [Hr]	32 bit UNSIGNED INT
30020 30021	B-power hour		XXXXXXXX. XX [Hr]	32 bit UNSIGNED INT
30022 30023	OPEN time (neutral)		XXXXXXXX. XX [Hr]	32 bit UNSIGNED INT
30024 30025	Failed States		-	32 bit UNSIGNED INT
	Bit 0: A-power reverse phase	Bit 16: B-power low-frequency		
	Bit 1: A-power phase sequence	Bit 17: B-power over-frequency		
	Bit 2: A-power low-voltage	Bit 18: B-side protection relay contact input		
	Bit 3: A-power overvoltage	Bit 19: B-side CLOSE failure		
	Bit 4: A-power low-frequency	Bit 20: B-side OPEN failure		
	Bit 5: A-power over- frequency	Bit 21: Failure on B-side synchronous transfer		
	Bit 6: A-side protection relay contact input	Bit 22: Reserved		
	Bit 7: A-side CLOSE failure	Bit 23: Reserved		
	Bit 8: A side OPEN failure	Bit 24: Generator fault		
	Bit 9: Failure on A-side synchronous transf er	Bit 25: Reserved		
		Bit 26: Reserved		
	Bit 10: Reserved	Bit 27: Reserved		
	Bit 11: Reserved	Bit 28: Reserved		
	Bit 12: B-power reverse phase	Bit 29: Reserved		
	Bit 13: B-power phase sequence	Bit 30: Reserved		
	Bit 14: B-power low-voltage	Bit 31: Reserved		
	Bit 15: B-power overvoltage			

30026	Controller status 1		-	16 bit UNSIGNED INT
	Bit 0: AUTO MODE Bit 1: REMOTE TYPE Bit 2 RUN status Bit 3 SETUP status Bit 4 PT input state Bit 5: A-power-fail status Bit 6: B-power-fail status Bit 7: Other fault conditions	Bit 8: All failure status Bit 9: A-power status Bit 10: B-power status Bit 11: A-power CLOSE status Bit 12: B-power CLOSE status Bit 13: Reserved Bit 14: Reserved Bit 15: Reserved		
30027	Controller status 2		-	16 bit UNSIGNED INT
	Bit 0: Set mode Bit 1: Peak shaving input state Bit 2: Generator failure signal input stat us Bit 3: Interlock signal input status Bit 4: Interlock control signal output stat us Bit 5: Generator start status Bit 6: Generator cooling status Bit 7: Generator speed control signal ou tput status	Bit 8: Generator test status Bit 9: Reserved Bit 10: Reserved Bit 11: Reserved Bit 12: Reserved Bit 13: Reserved Bit 14: Reserved Bit 15: Reserved		
30032	Controller status 2		-	16 bit UNSIGNED INT **Ver.: 2.340 or higher**
	Bit 0: A side ATS AUX input status Bit 1: B side ATS AUX input status Bit 2: INPUT DI.1 status Bit 3: INPUT DI.2 status Bit 4: INPUT DI.3 status Bit 5: INPUT DI.4 status Bit 6: INPUT DI.5 status Bit 7: INPUT DI.6 status	Bit 8: Reserved Bit 9: Reserved Bit 10: Reserved Bit 11: Reserved Bit 12: Reserved Bit 13: Reserved Bit 14: Reserved Bit 15: Reserved		

6.3 COMMAND (05h)

TX EXAMPLE: 01 05 00 03 FF 00 CRC16 → CTTS A-Power CLOSE signal on address 0004

Address	Contents	Data
0001	Alarm stop	0xFF00 Auto-clear
0002	Manual mode	
0003	Auto mode	
0004	A-side manual transfer	
0005	B-side manual transfer	
0006	OPEN	
0007	Remote peak shaving run/off	Setup: 0xFF00 Off: 0x0000
0008	Remote generator starting/stop	
0009	Generator fault status	

7. Product appearance

7.1 Product appearance (Content replacement space)

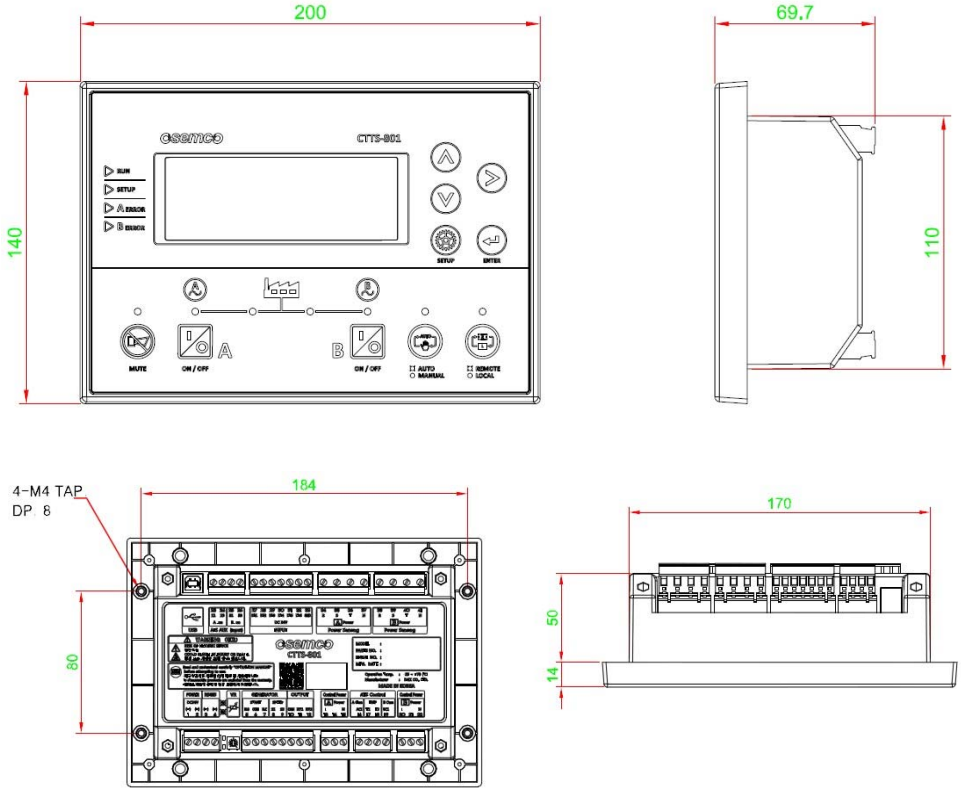

7.2 Panel cutting schematic

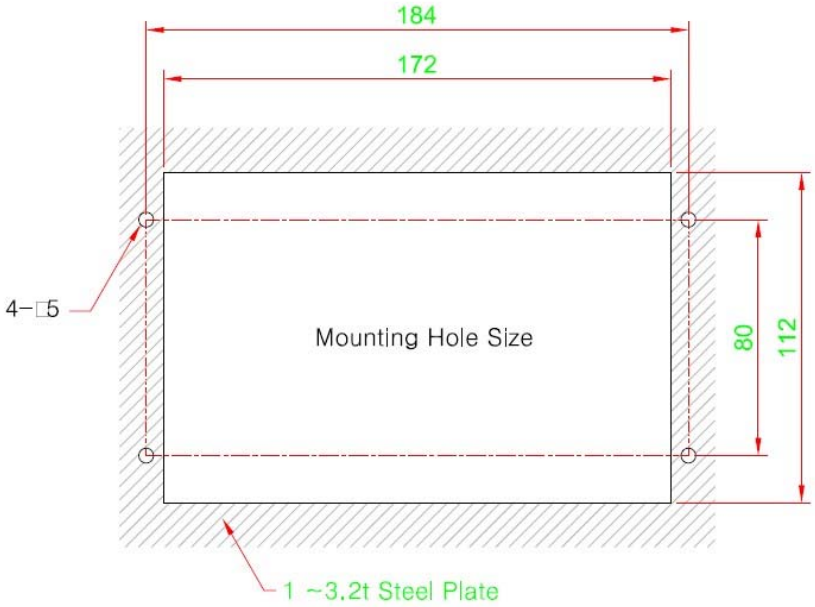

8. How to use the monitoring program

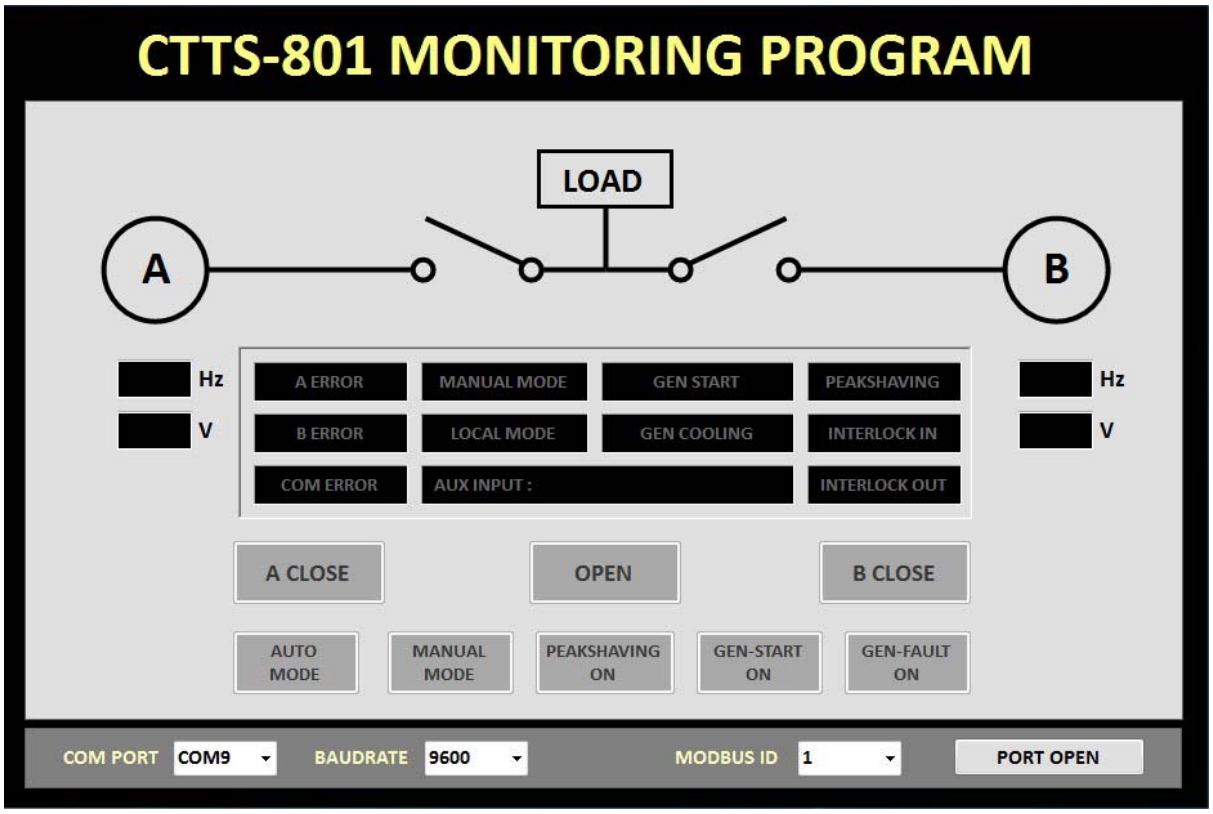

> Installation
1) Run CTTS-801_MMI_Installer.msi file to install the program. 2) Default installation location: C:\Program Files\OSEMCO\CTTS-801_MMI

> Network cable connection
1) Check if the COM port number is connected to RS485 on your PC. 2) Look up the assigned COM port number from “Device manager” if a USB-SERIAL converter is used. 3) If the COM port number is too high, force it to be set between COM1 and COM8. 4) CTTS-801 wiring between port number 3 (RX485(+)) and TRX(+) of RS485 converter 5) CTTS-801 wiring between port number 4 (RX485(-)) and TRX(-) of RS485 converter

> Run
1) Run the shortcut created on Desktop or execute C:\Program Files\OSEMCO\CTTS-801_MMI\CTTS-801_MMI.exe. 2) Select the PC communication port on COM PORT. 3) Select BAUDRATE from the CTTS-801 setup. 4) Type CTTS-801 ID in the MODBUS ID window. 5) Start communication by pressing the PORT OPEN button.