ATS CONTROLLER

[ACD-A]

User's Manual

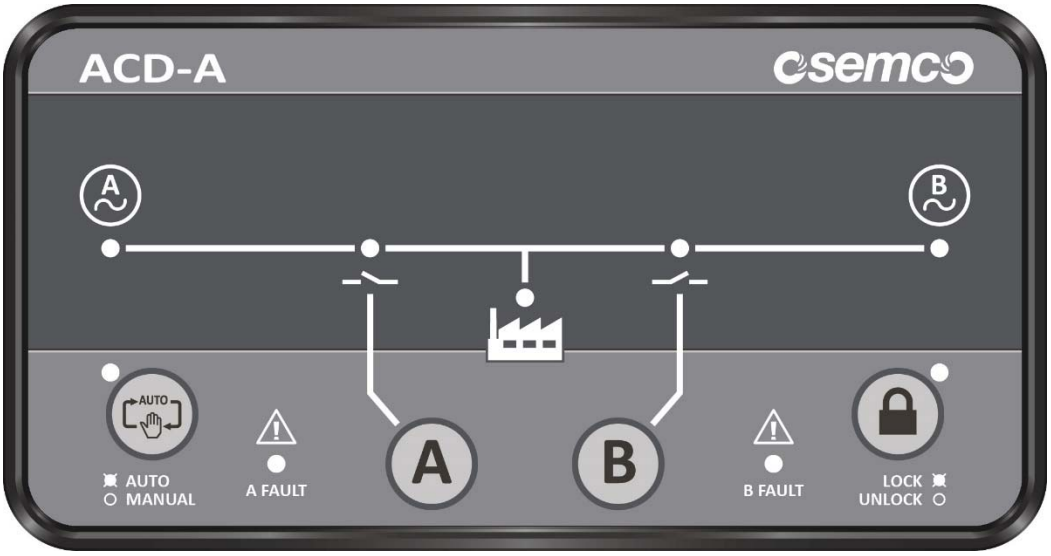

※ OSEMCO reserves the right, without notice, to change design or construction of any products and to discontinue.

O-Sung Electric Machinery Co., Ltd.

136, Hataemal-gil, Wollong-Myeon Paju-si, Gyeonggi-do, Korea

Tel : 82-31-944-3521 / Fax : 82-31- 944-3525

http://www.osemco.com / os@osemco.com

- TABLE OF CONTENTS –

1. Safety Notice

- 1.1 Transportation Precaution
- 1.2 Installation Precaution
- 1.3 Operation Precaution
- 1.4 Precaution of Maintenance, Inspection and Replacement

2. Construction of Controller

- 2.1 Specifications
- 2.2 External view
- 2.3 LED Display
- 2.4 Function button
- 2.5 Rear view
- 2.6 Terminal configuration
- 2.7 Setting switches
- 2.8 Time Delay setting
- 2.9 Function of Setting button

3. Timer setting

- 3.1 Enter the menu and setting
- 3.2 Time delay for A-ON
- 3.3 Time delay for B-ON

4. ATS control

- 4.1 Lock / Unlock Mode (Standard)
- 4.2 Manual operation
- 4.3 Auto operation
- 4.4 Voltage and Frequency protection

5. Outline dimensions

- 5.1 Dimensions
- 5.2 Panel cutting

6. Wiring Diagram

- 6.1 T3 or TO-Type
- 6.2 PC or PSO-Type
- 6.3 TN-Ttype

1. Safety Notice

These Safety Notice describes the important information for operator's safety. Before commencing installation or operation of this equipment, please read all notices carefully and note the details.

These safety notice are classified as "Danger" and "Caution" according to the hazard level.

Danger	Caution
Emergency situation, which may cause death of serious disaster if there is mistake	A potentially problematic situation, which may cause slight personal injury and/or damage

1.1 Transportation Precaution

Caution

- Do not throw controller or put heavy weight things on the box.
- Do not use knife or sharp tools once open the box.

1.2 Installation Precaution

Caution

- Installation should be performed by qualified persons.
- Prior to commencing any installation, make open the circuit breaker of upstream to isolate all power/voltage sources.

  Otherwise, electric shock may occur.
- Screws of terminal should be tighten as strong as specified torque.

  Otherwise, fire may occur.
- Controller should be installed solidly on the flat surface.
- Do not install where environmental conditions of high tempered, humid, dusty, noxious gas, vibration, impact.

  Otherwise, fire and malfunction may occur.
- Be careful to prevent foreign materials of dust, concrete powder, iron powder and rainwater, salinity from entering into the controller.

  Otherwise, fire and malfunction may occur.

1.3 Operation Precaution

Danger

- **Do not touch the main circuit and control terminal while power activated.**

  Otherwise, electric shock may occur.

- **Do not store at outdoor non-controlled.**

  This can cause the electric shock, damage or fire due to penetration of water or water vapor.

1.4 Precaution of Maintenance, Inspection and Replacement.

Caution

- **Maintenance, inspection or replacement of components should be performed by qualified persons**

- **Prior to commencing any works, make open the circuit breaker of upstream to isolate main circuit and control circuit from all power/voltage sources.**

  Otherwise, electric shock may occur.

- **Retighten the terminal screws of main and wiring periodically according to specified torque.**

  Otherwise, malfunction or fire may occur.

2. Construction of Controller

2.1 Specifications

1) Overall dimensions	:	(W) 169.3mm x (H) 88.7mm X (D) 56.8mm
2) Weight	:	1.0 kg
3) Ambient temperature	:	-25℃ ~ 70℃
4) LED display	:	High brightness LED
5) Voltage input	:	L-N : 220Vac, 230Vac / 50 or 60 [Hz].
6) ATS control relay	:	250[VAC] 16[A] 2a.
7) Contacts input	:	Contacts for ATS status (2)

2.2 External View

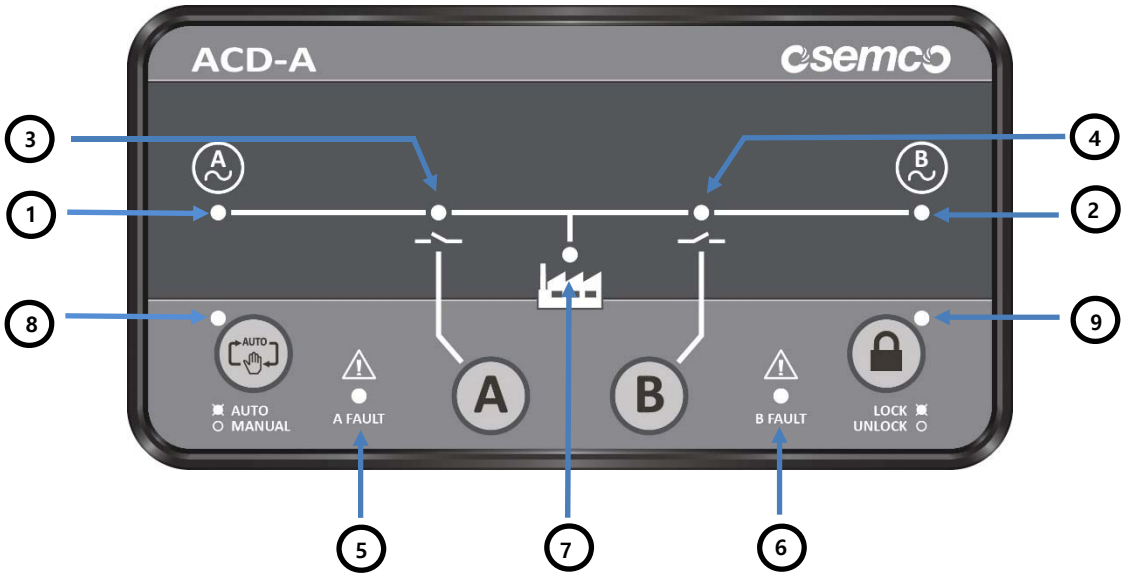

2.3 LED Display

No	LED	Color	Functions
①	A-POWER	Green	Indicating lamp lights while A-Power is normal Indicating lamp off when A-Power is blackout Indicating lamp flickering in 0.1sec interval when A-Power is abnormal(Over/under voltage, Over/under frequency)
②	B-POWER	Red	Indicating lamp lights while B-Power is normal Indicating lamp off when B-Power is blackout Indicating lamp flickering in 0.1sec interval when B-Power is abnormal(Over/under voltage, Over/under frequency)
③	A ON	Green	Lamp lights while A-Power of ATS is closed, and lamp off when B-Power is closed. Lamp flickering in 0.25sec interval when ATS is synchronized transferring from B-Power to A-Power.
④	B ON	Red	Lamp lights while B-Power of ATS is closed, and lamp off when A-Power is closed. Lamp flickering in 0.25sec interval when ATS is synchronized transferring from A-Power to B-Power.
⑤	A FAULT	Red	Lamps lights under A-Power is abnormal condition(Over/under voltage, Over/under frequency) Lamp flickering once failure of closing or open A-Power, or fail in synchronized transferring.
⑥	B FAULT	Red	Lamps lights under B-Power is abnormal condition(Over/under voltage, Over/under frequency) Lamp flickering once failure of closing or open B-Power, or fail in synchronized transferring.
⑦	LOAD	White	Lamp lights while ATS is closed to normal power source.
⑧	AUTO / MANUAL	Green	Lamp lights under auto operation mode, and lamp off under manual operation mode.
⑨	LOCK / UNLOCK	White	Lamp lights under Locked control status, and Lamp off under Unlocked control status

2.4 Function Button

Button	Name	Function
A	A-POWER ON	A-Power closing note 1)
B	B-POWER ON	B-Power closing note 1)
AUTO	AUTO/MANUAL	Auto/Manual operation change
	LOCK/UNLOCK	Lock/Unlock operation change

Note 1) Button should be pressed for 0.5sec in minimum.

2.5 Rear view

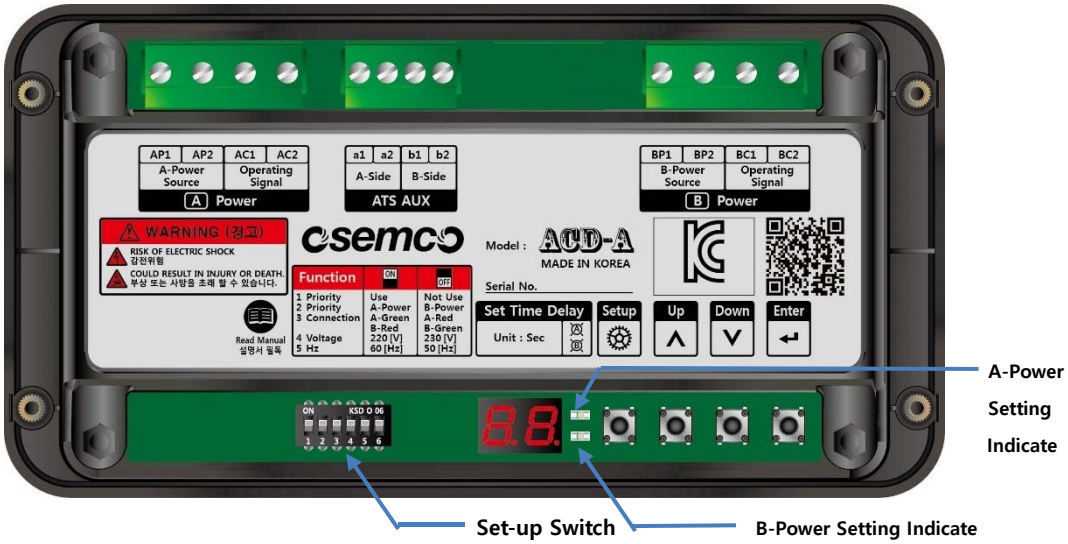

2.6 Terminal configuration

A Power			
AP1 AP2 AC1 AC2 A-Power Source / Operating Signal A Power	AP1	A Power voltage input※	Input A power sensed voltage (AC 220V or 230V)
	AP2		
	AC1	A Power closing output	Output ATS A Power closing command (A power AC voltage out)
	AC2		

※ Please do not voltage withstand test because surge protective varistor is built.

ATS AUX			
a1 a2 b1 b2 A-Side / B-Side ATS AUX	a1	Contact input	Connect auxiliary contacts of ATS A power closing status※
	a2		
	b1	Contact input	Connect auxiliary contacts of ATS B power closing status※
	b2		

※ Do not connect other circuit than ATS AUX because self-power is generated. Otherwise malfunction or damage may occur.

B Power			
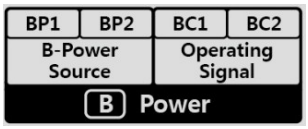	**BP1**	B power voltage input※	B power sensed voltage input (AC 220V or 230V)
	BP2		
	BC1	B power closing output	Closing command output for ATS B power (B power AC volts output)
	BC2		

※ Please do not voltage withstand test because surge protective varistor is built.

2.7 Setting switches

No	PARAMETER SETTING		
1	Priority	Use※	Use Power priority or not
		Not Use	
2	Priority	A-Power※	A power or B power priority
		B-Power	
3	Connection to ATS	A-Green / B-Red※	ATS bus-bar: A-Utility(Green), B-Emergency(Red)
		A-Red / B-Green	ATS bus-bar: A-Emergency(Red), B-Utility(Green)
4	Voltage	220[V] ※	Input voltage
		230[V]	
5	Hz	60[Hz] ※	Input frequency
		50[Hz]	
6	No use	No Function	Set-up Emergency switch

Note: ※ is factory configured default

2.8 Set Tine Delay Function

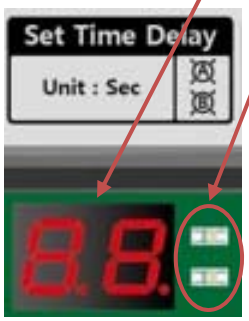

FND Function

- At normal mode [--] shall be shown, and when setting is begin the set time be shown with sec.

LED Function

- Consist with A power set and B power set, and lamp offed at normal mode, and when setting is begin shall be lights as below.

> A power time delay setting: A lamp lights

> B power time delay setting: B lamp lights

2.9 Function of setting button

No	Button		
1		Normal status	When you press manual operation button for 1sec then you may enter setting status
		Setting status	Go to next menu without record a set value
2		Increase value (99sec max)	
3		Decrease value (0sec min)	
4		Normal status	Lamp test will be done when button pressed for 1set under manual operation mode
		Setting status	Go to next menu after record a set value

3. Time switch setting

3.1 Enter menu and setting

1) With pressing [Setup] for 1sec under manual operation mode then you may enter time delay menu.

2) If you want to record data and go to next menu please press [Enter] button, and you will go to normal mode at last menu.

3) If you press [Setup] button while setting, you may go to next menu without data record.

4) Order of menu: [Local Manual mode] → [A-power closing time delay] → [B-power closing time delay] → [Synchronizing time delay] → [Local Manual mode]

3.2 A power closing time delay

1) Light A power lamp, B power lamp if off, and current set value shown on FND window.

2) Make increase/decrease time set using by [Up], [Down] button.

3) By pressing [Enter] button, data is recorded and go to next menu.

4) If you press [Setup] button, you will go to next menu without data record.

5) Time range settable is 0sec to 99sec.

6) Factory configured default is 5sec.

3.3 B power closing time delay

1) A power lamp if off, B power lamp lights, and current set value shown on FND window.

2) Make increase/decrease time set using by [Up], [Down] button.

3) By pressing [Enter] button, data is recorded and go to next menu.

4) If you press [Setup] button, you will go to next menu without data record.

5) Time range settable is 0sec to 99sec.

6) Factory configured default is 5sec.

4. Control of ATS

4.1 LOCK/UNLOCK Mode (Standard)

1) You may change the mode with prssing **[LOCK/UNLOCK]** button.

2) Current mode may be saved in EEP memory which locates in the controller.

When the controller is reboot, LOCK/UNLOCK maintains previous condition.

4.1.1 UNLOCK Mode

1) The white light off in UNLOCK mode

2) Using button of ACD-A, You may operate and control

4.1.2 LOCK Mode

1) The white light on in LOCK Mode

2) Using button of ACD-A, You may operate and control

4.2 Manual operation

4.2.1 Availability of manual operation

1) Available to make ATS A power ON and B power ON by button operation or RS485 communication.

2) Manual synchronized transferring is available when both power is activated in service normally.

4.2.2 Manual control

1) A power ON

① A power ON is available once only A power is normal status.

② While **[A-POWER ON]** button pressed over 0.5sec, ATS transfer power from B-power to A-power.

2) B power ON

① B power ON is available once only B power is normal status.

② While **[B-POWER ON]** button pressed over 0.5sec, ATS transfer power from A-power to B-power.

3) Synchronized transferring of ATS

① Manual synchronized transferring is available when both power is activated in service normally.

② Once **[B-POWER ON]** button pressed over 0.5sec, ATS shall be switched to B power after time delay set.

③ Once **[A-POWER ON]** button pressed over 0.5sec, ATS shall be switched to A power after time delay set.

④ Time delay for synchronizing is 5minute max, and if fail within 5min, manual synchronizing shall be cancelled.

4.3 Automatic operation

1) The controller make ATS A-power or B-power ON, or synchronized switching after time delay while sensing of power condition.

2) Automatic operation:

① According to **[Power Priority]** set, ATS will make switching when both power is normal condition.

② Once serviced power line is abnormal, and standby power is normal condition, ATS shall be switched to standby line after time delay set.

③ If fail to switch, output command again 3times every 3sec, after this controller judge that ATS is failure (FAULT lamp lights)

④ Output of closing command shall be kept for 0.5sec.

3) Operation on **[Power Priority]** set

When ATS I synchronized switching according to **[Power Priority],** controller wait for phase synchronize of both power for 5minute. If fail to synchronizing, controller will make ATS non-synchronized switching.

① **[Power Priority] A power selected**

: During B power closed, if A power become a normal condition, ATS will synchronized switch to A power from B power.

② **[Power Priority] B power selected**

: During A power closed, if B power become a normal condition, ATS will synchronized switch to B power from A power

4.4 Voltage & Frequency protection function

1) Voltage protection range

220Vac (tolerance ±2V)	
Over voltage	Pick up 242V, Return 237V
Under voltage	Pick up 187V, Return 191V

230Vac (tolerance ±2V)	
Over voltage	Pick up 253V, Return 248V
Under voltage	Pick up 187V, Return 191V

2) Frequency protection range

60Hz (tolerance ±0.2Hz)	
Over frequency	Pick up 65.0Hz, Return 64.0Hz
Under frequency	Pick up 55.0Hz, Return 56.0Hz

50Hz (tolerance ±0.2Hz)	
Over frequency	Pick up 55.0Hz, Return 54.0Hz
Under frequency	Pick up 45.0Hz, Return 46.0Hz

5. Outline dimensions

5.1 Outline dimensions

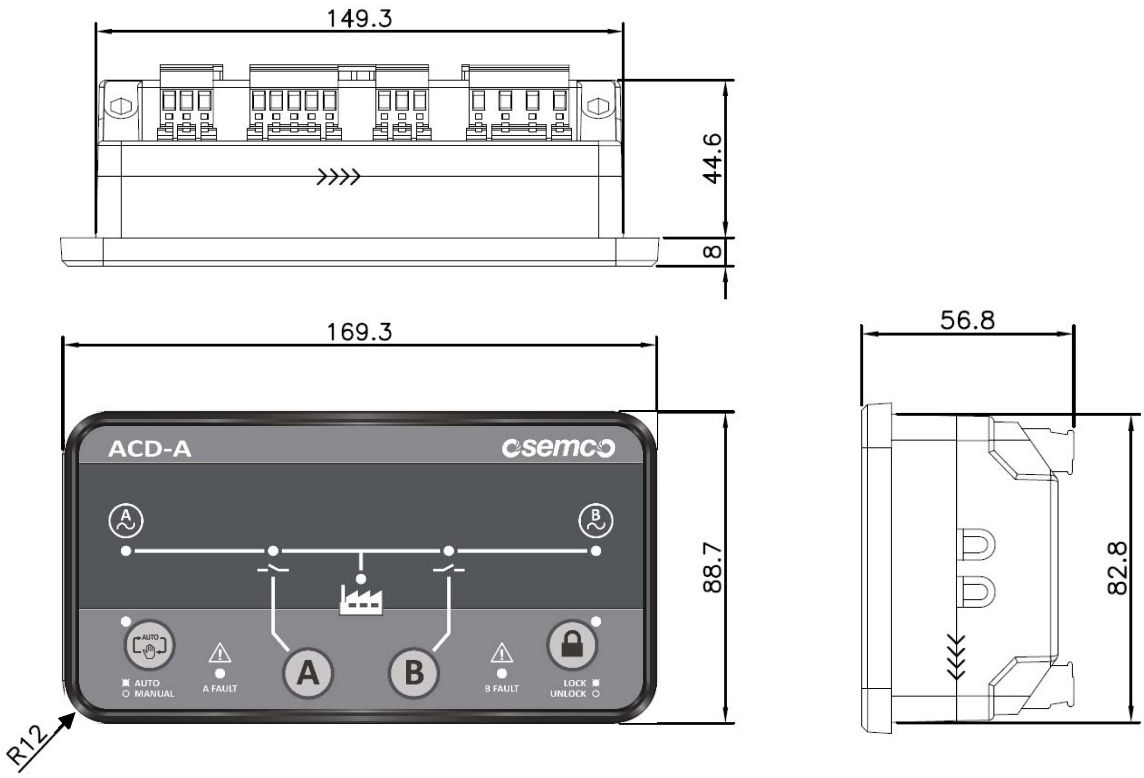

5.2 Panel cutting

6. Wiring diagram

6.1 T3 or TO-Type

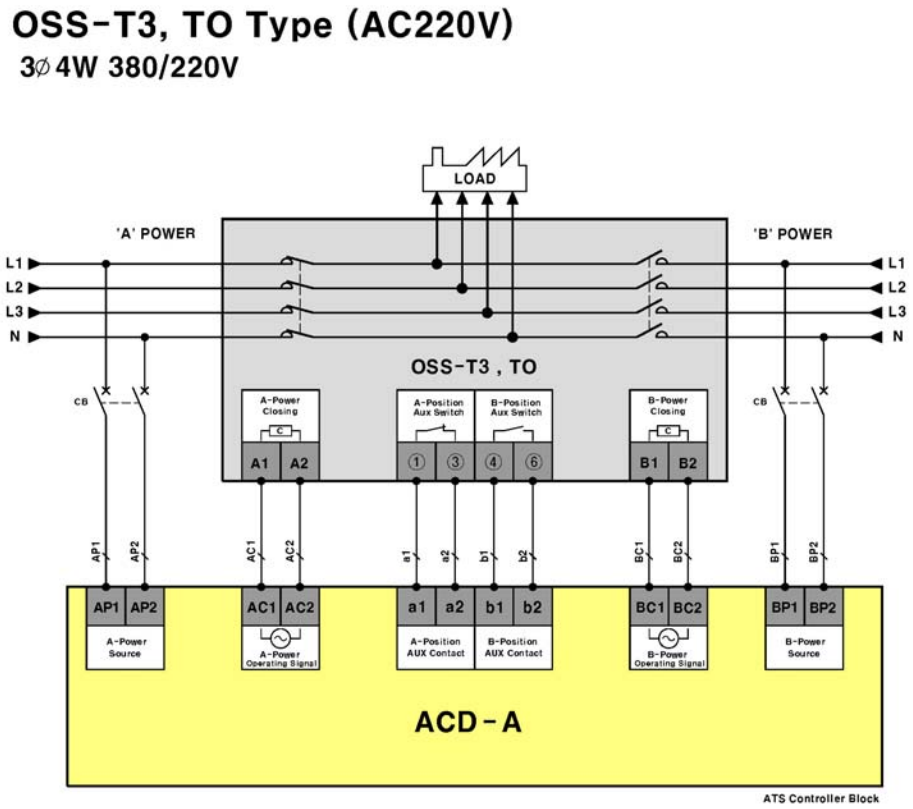

6.2 PC or PSO-Type

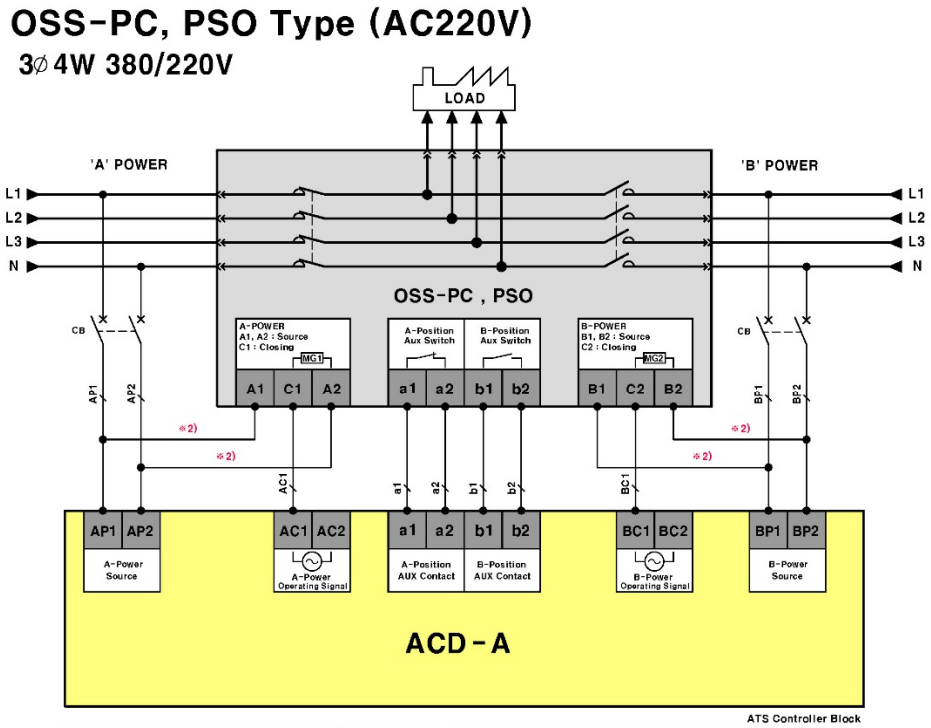

※2) ATS 1,600A 이하 사용시 전선의 굵기는 2.5㎟ 이상 사용합니다.
ATS 2,000A 이상 사용시 전선의 굵기는 4.0㎟ 이상 사용합니다.
ATS 4,000A 이상 사용시 전선의 굵기는 6.0㎟ 이상 사용합니다.

※2) More than 2.5㎟ power cable used for 1,600A ATS or less.
More than 4.0㎟ power cable used for 2,000A ATS or over.
More than 6.0㎟ power cable used for 4,000A ATS or over.

6.3 TN-Type

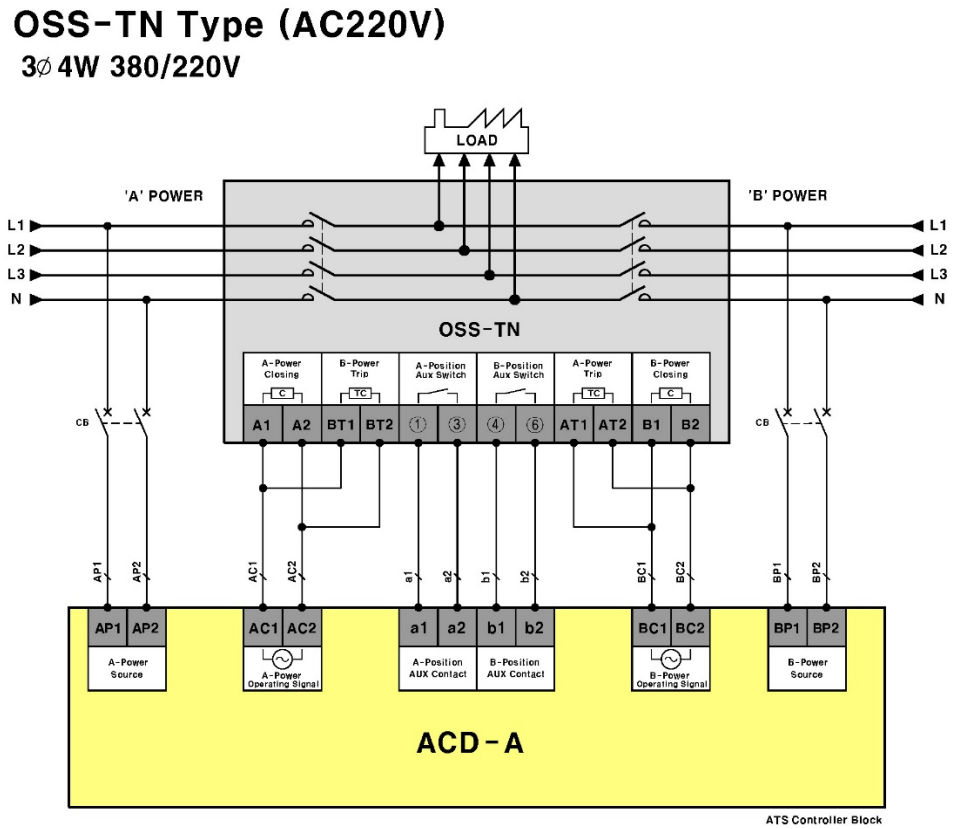
OSS-TN Type (AC220V)
3∅4W 380/220V
LOAD
'A' POWER
'B' POWER
L1
L2
L3
N
OSS-TN
A-Power Closing
B-Power Trip
A-Position Aux Switch
B-Position Aux Switch
A-Power Trip
B-Power Closing
C
TC
A1
A2
BT1
BT2
①
③
④
⑥
AT1
AT2
B1
B2
CB
AP1
AP2
AC1
AC2
a1
a2
b1
b2
BC1
BC2
BP1
BP2
A-Power Source
A-Power Operating Signal
A-Position AUX Contact
B-Position AUX Contact
B-Power Operating Signal
B-Power Source
ACD-A
ATS Controller Block